NAPLES, SEPTEMBER 2018

Shore-to-ship power and smart ports

Creating Stronger, Smarter and Greener port grids

1 **Stronger, smarter and greener port grids**

2 Optimized solutions for specific port needs

3 Shore-to-ship power and port electrification

4 Digital
Enabling more together

5 Conclusion
Enabling more together

Smart ports
Towards decarbonisation

Mission

- Become market leaders
- Maximize return on investment
- Add more capacity
- Ensure smooth operations
- Minimize energy consumption
- Reduce pollution to the absolute minimum

Ports want to be…

1

Competitive

2

Efficient

3

Green

A smart port requires a smart grid
Transitioning from a traditional to smart grid

From a traditional grid

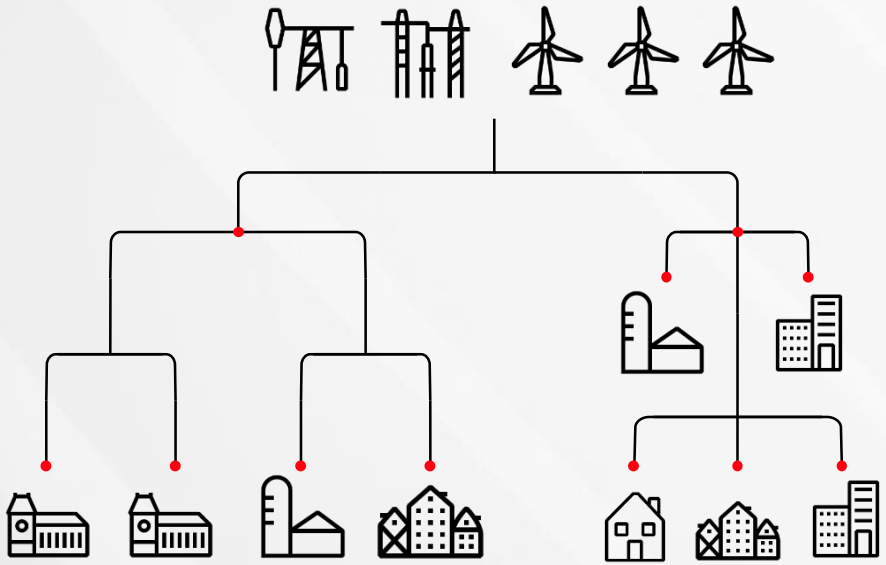

- Centralized power generation
- One-directional power flow
- Generation follows load
- Top-down operations planning
- Operation based on historical experience

To a smart grid

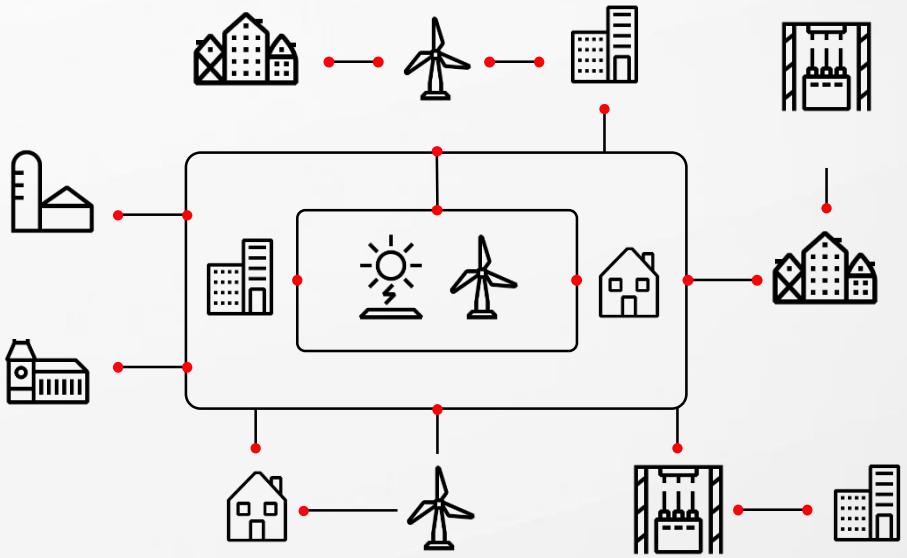

- Centralized and distributed generation
- Multi-directional power flow
- Intermittent renewable generation
- Consumption integrated in system operation
- Operation based on real-time data

Why should ports become smart?
New consumers with new demands

Demand

E-mobility market (E-vehicles and E-buses) is growing extremely fast

Shore-to-ship power, hybrid and fully electrical ferries are now a reality

State-of-the-art Port Electrification solutions

Supply

Integration of renewables is launching ports into a new green era

Producing electricity on-shore is more efficient than on-board generation

Shore-to-ship power
High efficiency and sustainable port

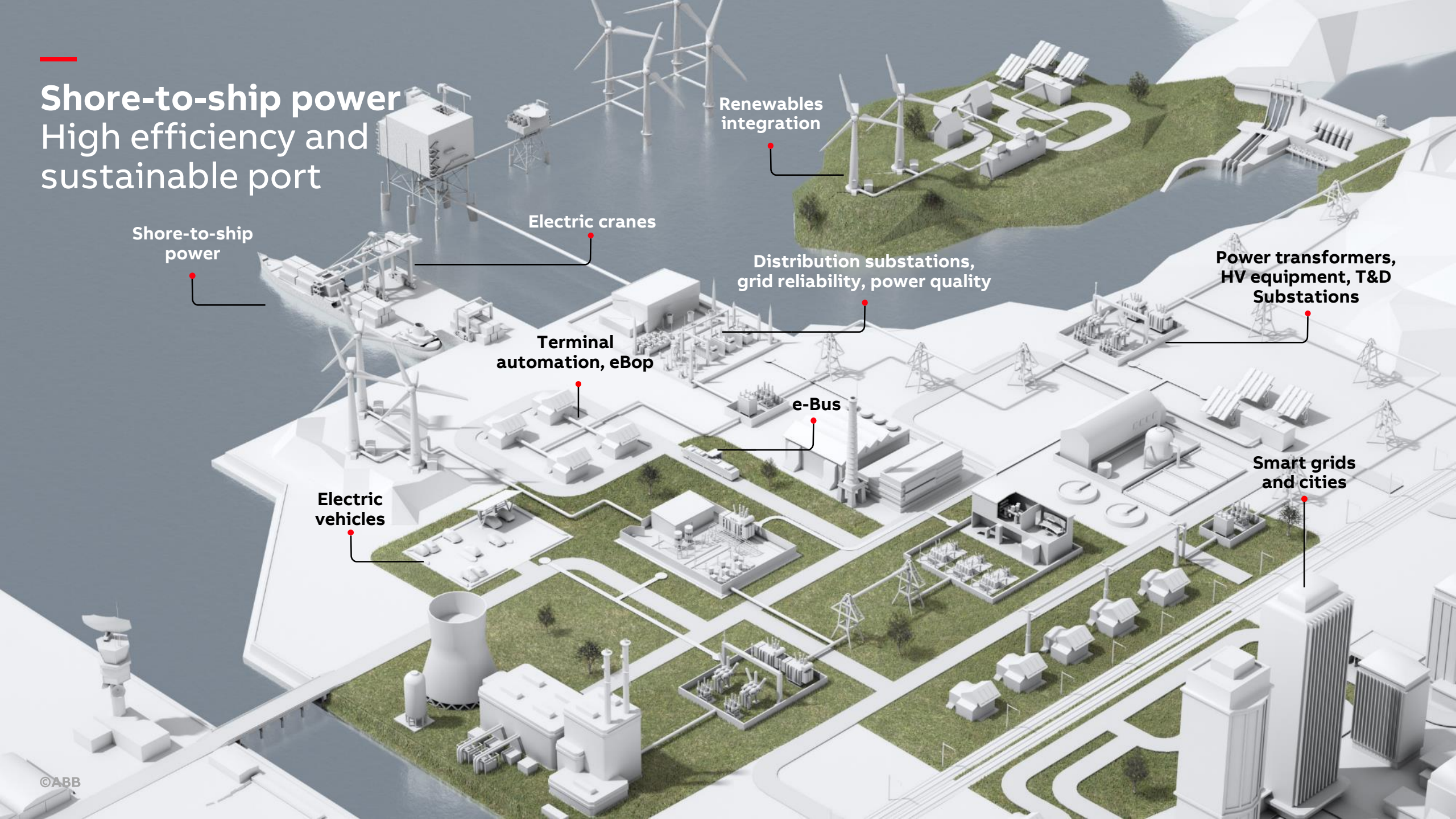

Shore-to-ship power and smart ports
Optimized solutions for specific port needs

Technological Leadership
State-of-the-art portfolio supported by dedicated R&D programs

OPEX/CAPEX optimization
Tailor made smart port solutions

Customization
Engineered solutions to comply with high level customer requirements

A smarter, stronger, greener port grid

A to Z
Full support from inception phase to end of life

Global Presence
Over 100+ locations worldwide

An environmental issue
Emissions from vessels during port stay

More than
100,000
Vessels dock at

4,500
Ports worldwide
...resulting in

+
Noise

+
Emissions
CO_2, SO_x, NO_x and PPM

+
Vibration

900 **million**
metric tons of CO_2, SO_x, NO_x
and PPM emitted annually

Equal to
220
coal-fired plants

Benefits
With shore-to-ship power solutions

1 Cruise ship connected to the grid in the port

Could annually save
CO_2
emissions

Equivalent to about
2,500
Cars

Shore-to-ship power

What does a shore-to-ship power supply do?

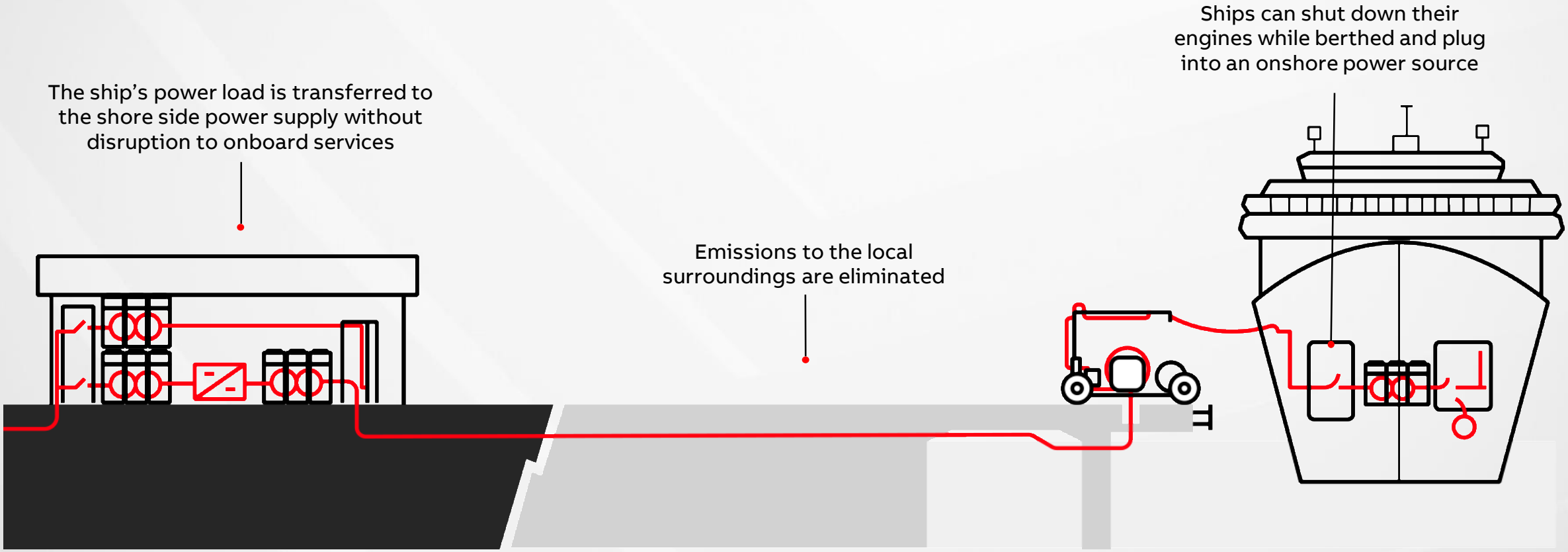

Shore-to-ship power
Specific requirements for each type of vessel

- HVSC or LVSC – Low Power
- HVSC – High Power
- Special Application

Characteristics	RORO/Ferry	Container	Cruise	LNG/Tanker/ FSU/FPSO	Shipyard/Navy
Voltage	11 kV or low voltage	6.6 kV	6.6 and 11kV	6.6 kV	6.6, 11 kV or low voltage
Max power consumption	6,5 MVA	7,5 MVA	16/20 MVA	10 MVA	Case by case
Frequency	60 and 50 Hz	60 Hz mainly	60 Hz mainly	60Hz	50 and 60 Hz
Plugs/cables (per connection)	1	2	4+1	2/3	Case by case
Transformer	Onboard	Onshore	Onshore	Onshore	Case by case
Layout	Not critical	Critical	Critical	Critical	Not critical
Load profile	Partially controlled	Partially controlled	Flat profile	Flat profile	Case by case
Protect selectivity	Critical	Not critical	Critical	Critical	Case by case
Cable management system	Mid cost	Low cost	High cost	Mid cost	Case by case

Shore-to-ship power
Custom solutions for each type of vessel

Cruise vessels

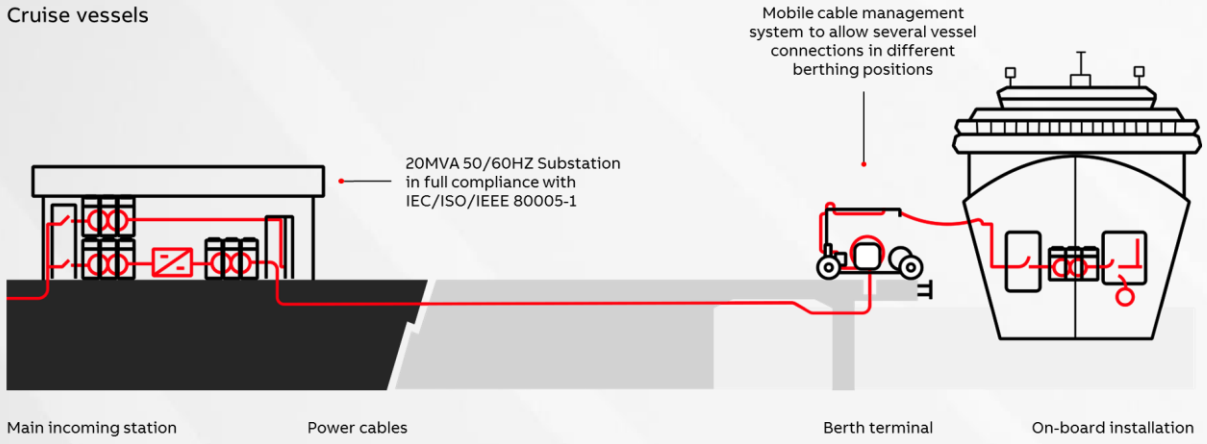

Container vessels

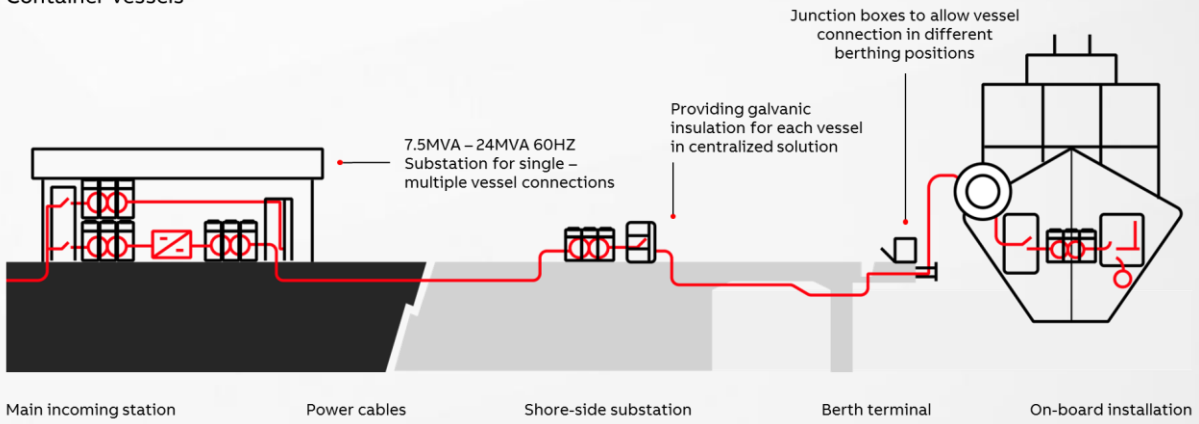

RORO/ – Ferry/navy/shipyard special applications (or O&G vessels)

PCS100 SFC
Low voltage

0.1-2 MVA / Unit

ACS6000 SFC
Medium voltage

5-24 MVA / Unit

Shore-to-ship power
Traditional S2SP solutions – single vessel connection

Incoming MV supply

1 to 20MVA Static Frequency Conversion System to supply No.1 vessel

Harmonic filters

Cable Management System

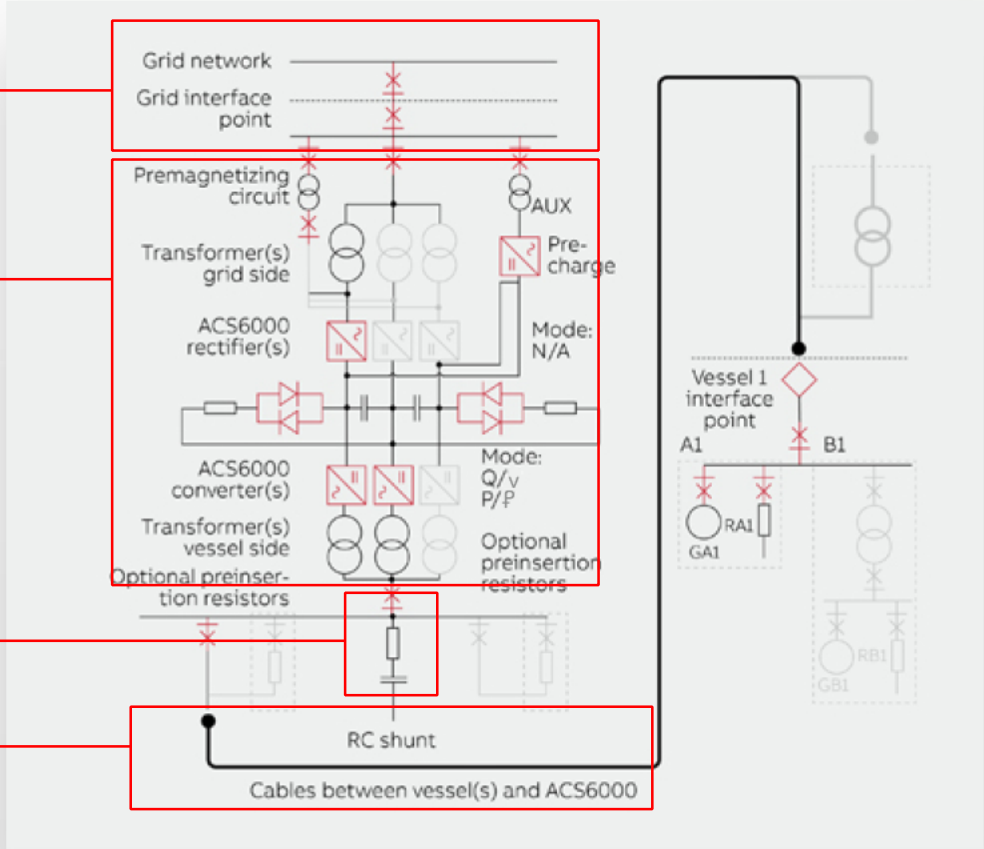

One single converter can supply a cruise vessel ensuring full compliance with IEC/ESO/IEE 80005-1

Shore-to-ship power
Centralized S2SP solution in container terminals

No.3 Isolation transformers

Incoming MV supply

Centralized static frequency conversion (ACS6000 SFC)

Harmonic filters

Cable connections

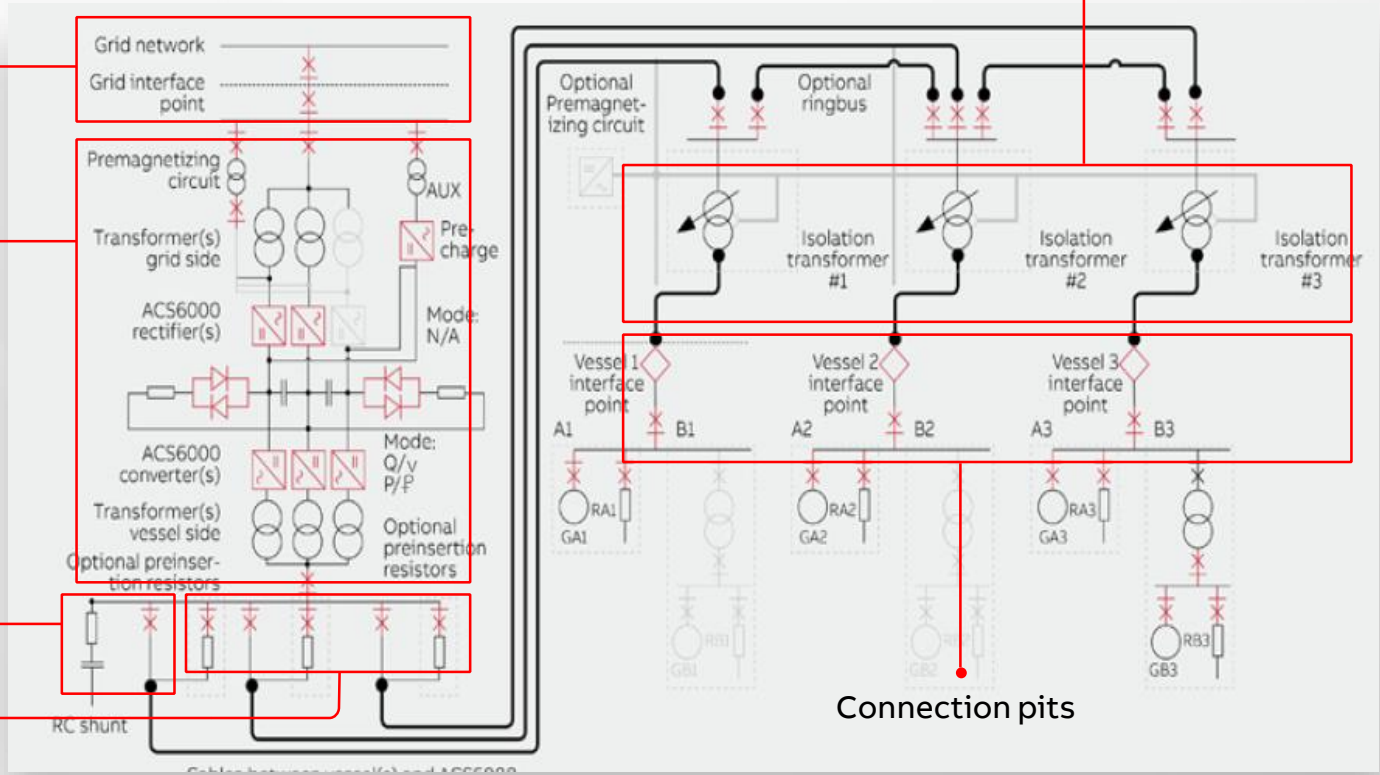

Connection pits

Enabling multiple high power vessel connections

Shore-to-ship power and smart ports
Selected references

Gothenburg, Sweden

Ystad, Sweden

Vancouver, Canada

Rotterdam, Netherlands

Fincantieri, Italy

Delimara, Malta

Dalian, China

Moin, Costa Rica

1 Stronger, smarter and greener port grids

2 Optimized solutions for specific port needs

3 Shore-to-ship power and port electrification

4 **Digital**
Enabling more together

5 Conclusion
Enabling more together

Grid integration

ABB Ability™: Digital solutions to drive better business outcomes

ABB Ability™

Physical system	Connectivity solutions	Digital twin	Digital applications	Collaboration environment
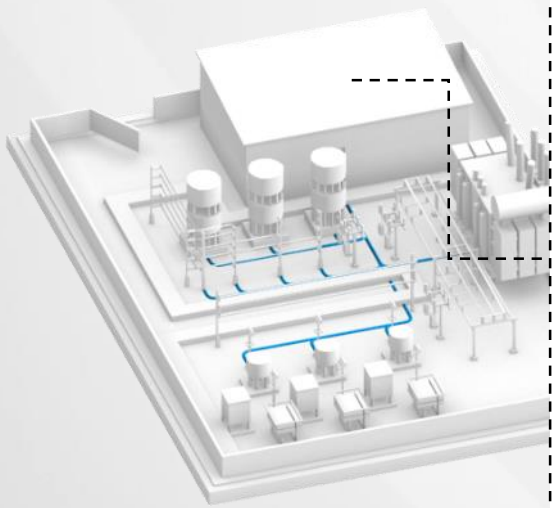	**Digital** Edge, Cloud **Human** Service, advisory **Autonomous systems** Drones, robots	Digital model portfolio: **Engineering** **Project** **Layout**	**Asset Health Center** **Reliability care** **Lifestretch** **Analytics**	**Portals** **Mobile** **Collaboration rooms**

Business outcomes

Plan

- Investment decisions
- Asset assessments

Build

- Configuration and needs
- Execution excellence

Operate

- HSE and training
- Maintenance enhancement
- Performance improvement
- Operational excellence

Cyber security

Grid integration

Cyber security to protect and comply throughout the entire system lifecycle

With the increasing threat to cyber security, regulations and standards are being created to protect utilities and provide the correct response to cyber threats.

We offer cyber security solutions to protect and comply throughout the entire system lifecycle:

- Security update management service
- Annual Security refresh
- Cyber vulnerability assessment
- System restoration exercise
- Cyber security consulting

1 Stronger, smarter and greener port grids

2 Optimized solutions for specific port needs

3 Shore-to-ship power and port electrification

4 Digital
Enabling more together

5 **Conclusion**
Enabling more together

Conclusion
Partnership for success

The tide is turning

Sustainable development in ports relies on achieving the optimum balance of costs and benefits.

One size does not fit all, so each project must be analyzed specifically to ensure CAPEX / OPEX optimization.

Technology providers like ABB are playing a key role in removing barriers towards the large-scale implementation of shore-to-ship power and port electrification solutions.

> **ABB Grid Integration solutions help to balance the demand created by new electricity consumers entering ports with traditional and renewable power generation by enabling a stronger, smarter and greener port grid.**

Patrick Fragman
Managing Director,
ABB, Power Grid, Grid Integration

ABB